V 26.1

其它系列 CHIKU® 电气产品选型手册，欢迎垂询索取！

For more info, please contact us.

HUNTEC

SUZHOU HUNTEC INT'L TRADING CO., LTD.

Add.: 36 zijing street, Mudu Town, Wuzhong District,Suzhou, Jiangsu Province, China

Factory: Jiangxi Huntec Electrical Technology Co.,Ltd.

Add.:1829th Yangguang Avenue, Xinyu, Jiangxi Province, China

Email: info@cnhuntec.com

Tel: +86-0512-65577928

Website: www.cnhuntec.com

www.chikucontact.com

All images are reference only,any change without notification prev-iously.All details and data subject to our final confirmation.

Sys - Function Contact Selection Guide

HUNTEC



VENTILATION PLUG

Electrical Connection Protection

Selection Guide

电联防护系统选型手册

+ 关于我们
About Us



人　　员：共有员工1,000余人，其中研发和工程人员技术人员占比15%
服务网络：设立有上海、深圳、东莞、北京、南京、苏州、合肥等营销和服务中心
设计制造：产品设计、模具设计及制造、冲压、车削、注塑、组装测试的全链条生产，拥有独立的知识产权
证书及体系：国家高新技术企业、省级科研中心、CNAS认可实验室、ISO9001等三体系合一，TUV、UL、CE、CQC等认证

Personnel: More than 1,000 employees, of which R&D engineers account for 15%

Service network: Direct marketing and service centers in Shanghai, Shenzhen, Dongguan, Beijing, Nanjing, Suzhou and Hefei.

Design and manufacture: Full-chain production of product design, mold design and manufacturing, stamping, turning, injection molding, assembly and testing, with independent intellectual property.

Certificates and systems: National high-tech enterprises, provincial scientific research centers, CNAS accredited laboratories, ISO9001, etc. Three systems in one, TUV, UL, CE, CQC and other certifications.

质量方针/Quality Policy：

严谨求实/Rigorous and realistic, 卓越品质/Excellent quality
优良服务/Excellent service, 持续发展/Sustainable development

COMPANY PROFILE

COMPANY VISION

企业愿景

we are committed to keeping China's electric connection technology in step with the world.

Creat better return on investment and experience for global customers.

致力于让中国电连接技术与世界同步

为全球客户创造更佳投资回报和体验

COMPANY MISSION

企业使命

We are committed to providing professional electrical connection solutions for our partners

矢志为合作伙伴提供专业电连接解决方案

COMPANY VALUE

企业价值观

Same goal,same ideal,
fighting together !

航者远 • 同欲胜











吸收创新　真诚信任　自主制造

Absorption Innovation • Sincere Trust • Independent Manufacturing

应用领域 / Application Areas

风力光伏发电 / Wind power＆solar photovoltaic power generation

在全球双碳机制下的当今，光伏发电具有清洁性、安全性、广泛性、充足性及潜在的经济性等优点，
在长期的能源战略中具有重要地位。

Under the current global dual-carbon mechanism, photovoltaic power generation has the advantages of cleanliness, safety, ubiquity, sufficiency and potential economy, and plays an important role in the long-term energy strategy.

船舶制造 / Shipbuilding

提升造船行业主要配件和专用设备广泛国产化，提供更优质的电缆和设备保护解决方案。

Improve the extensive localization of major accessories and special equipment in the shipbuilding industry, and provide better cable and equipment protection solutions.

工业自动化 / Automated industry

随着工业4.0时代的来临，对高精度智能化设备电气连接有更高需求，
我们的产品稳定性和耐用性、精密性，
经过各项检测，更加广泛地用于机械制造和电气工程领域。

With the advent of the era of Industry 4.0, there is a higher demand for the electrical connection of high-precision intelligent equipment.
Our product stability and durability, precision, After various tests, it is more widely used in the fields of mechanical manufacturing and electrical engineering.

新能源汽车 / New energy vehicles

新能源汽车是指采用非常规的车用燃料作为动力来源（或使用常规的车用燃料、采用新型车载动力装置），
具有新技术、新结构的汽车。
我们的产品在保护线缆和设备起到了重要作用。

New energy vehicles refer to vehicles with new technologies and new structures that use unconventional vehicle fuels as power sources (or use conventional vehicle fuels and new vehicle power units).
Our products play an important role in protecting cables and equipment.

做电气连接行业领导者

To Be The Leader In Electrical Connection







+ Application field





COMPANY VISION

企业愿景

we are committed to keeping China's electric connection technology in step with the world.

Creat better return on investment and experience for global customers.

致力于让中国电连接技术与世界同步

为全球客户创造更佳投资回报和体验

COMPANY MISSION

企业使命

We are committed to providing professional electrical connection solutions for our partners

矢志为合作伙伴提供专业电连接解决方案

COMPANY VALUE

企业价值观

Same goal,same ideal,
fighting together !

航者远 • 同欲胜











吸收创新　真诚信任　自主制造

Absorption Innovation • Sincere Trust • Independent Manufacturing

产品目录
Product Catalog

Products Content

RSV-...螺纹式尼龙透气阀 01
Air Vent Plug(Thread type,Nylon)

RSVK 卡扣式尼龙透气阀 06
Air Vent Plug(Snap–fit, Nylon)

R◇M 螺纹式普通金属透气阀 07
Threaded standard metal vent valve

RSV...-... 尼龙防爆透气阀 12
Burst–proof breathable valve

RAM-... 金属防爆透气阀 14
Metal burst–proof breathable valve

R◇M-... 金属消防安全阀 19
Safety valve for fire protection

IP防护等级说明 24
Protection Level Descriptions

螺纹标准和开孔数据 25
Thread standard







R... 系列透气阀

Air Vent Plug

防水透气阀是将防水透气膜固定在阀体中利用防水透气膜的特性，实现防水、防尘、透气功能的功能性阀体。保证持续性的压力平衡和透气效果。提升户外设备安全性、可靠性，延长设备寿命。

A waterproof and breathable valve is a functional component that integrates a waterproof breathable membrane into its housing. By leveraging the unique properties of the membrane, it delivers waterproof, dustproof, and breathable performance while maintaining continuous pressure equalization and ventilation. This significantly enhances the safety and reliability of outdoor equipment, ultimately extending its service life.

CE IP68 RoHS







RSVK 尼龙卡扣透气阀规格命名方法
Snap–fit Nylon Air Vent plug Coding Rules

RSVK-8.5-3.6-BL-O-66 -PA6G15

- 材质/Material
- 防护等级/ IP Grade
- O型圈/ O–ring
- 颜色/ Colors
- 卡爪间距 / Thread Length
- 卡爪外径 / Thread Spec.
- 类别 / Type

RSV 尼龙螺纹透气阀规格命名方法
Screw–in Nylon Air Vent plug Coding Rules

RSV-M6*0.75-7-GY-OM-PA66G25UV

- 材质和防护等级/ Material ＆IP Grade
- O:O型圈，P:平垫圈，M是螺母（可选）
  O–ring，Plain washer,M–Nut（selectable）
- 颜色/ Colors
- 螺纹长度 / Thread Length
- 螺纹规格 / Thread Spec.
- 类别 / Type

R◇M 金属螺纹透气阀规格命名方法
Screw–in Metal Air Vent plug Coding Rules

R◇M - M12*1.5-10-D-BW-OM-66

- 防护等级/ IP Grade
- O:O型圈，P:平垫圈，M是螺母（可选）
  O–ring，Plain washer,M–Nut（selectable）
- 颜色/ Colors:BW,BS,DS
- 结构类型，D:顶部安装结构/Top–mounted structure
  C:侧面安装结构/Side–mounted structure
- 螺纹长度 / Thread Length
- 螺纹规格 / Thread Spec.
- 类别 / Type:RAM, RCM,RSM

生产工艺优势/Production process advantage

车间：洁净的生产环境以保障产品的二次污染和操作工人的舒适度，保证稳定的产品质量和稳定的产业工人。
设备：全自动生产线可以减少对工人的依赖，同时保证产品的一致性和稳定性。
检测：100%的透气度全测，保证产品的合格率和客户终端的完美体验。
焊接：超声波焊接保障每个产品耐冲击。
序列号：每个产品的独立的激光序列号可以保障产品的良好的追溯性，并形成数据包。

Workshop: Clean production environment avoided the secondary pollution of products and ensuredoperation workers' comfort, products quality and industrial workers stable.

Equipment：The automatic production line can reduce the dependence on workers and ensure theconsistency and stability of the products.

Measurement：100% air permeability test guaranteed products qualification rate and terminalcustomer perfect experience.

Welding: Ultrasonic welding ensured the impact resistance of each product.

Serial number: The independent laser serial number of each product can guarantee good traceabilityof the product and form a packet.

防护等级测试 IP Level Test

防水透气产品防止颗粒物和水进入的能力

The ability of waterproof breathable products provent particles and water from access.

方法/Measurement：
- IEC 60529
- IP66
- IP67
- IP68（持续浸泡：1米水深，浸泡 2小时IP68/sustaining soaking：soaking for over 2 hours in 1M water）

温度测试 Temperature Test

防水透气产品在各种温度下的耐用性

The durability of waterproof breath-able products at various temperatures.

方法/Measurement：
- IEC 60068–2–1（达–40℃）
- IEC 60068–2–2（达+125℃）
- IEC 60068–2–14（循环温度：介于–40 ℃~+125℃之间/Circulating temperature：Between–40℃~+125℃）

湿度测试 Humidity Test

防水透气产品高温潮湿与环境中的耐用性（加速老化测试）

The duablity of waterproof breath-able products in high temperation environment（Accel-erated Aging Test）

方法/Measurement：
- IEC 60068-2-78

测试条件/Test Condition：
- 85℃
- 85%相对湿度/Relative Humidity
- 1000小时/hours

振动测试 Vibration Measurement

防水透气产品抗振能力

Anti-vibration ability of waterproof breathable products.

方法/Measurement：
- IEC 60068–2–64

阻燃测试 Flame Retardant Test

防水透气产品阻燃能力

Waterproof and breathable products flame retardant ability.

方法/Measurement：
- UL94–V0 非金属盖、本体、螺母/Non–Metal cover,body,nut

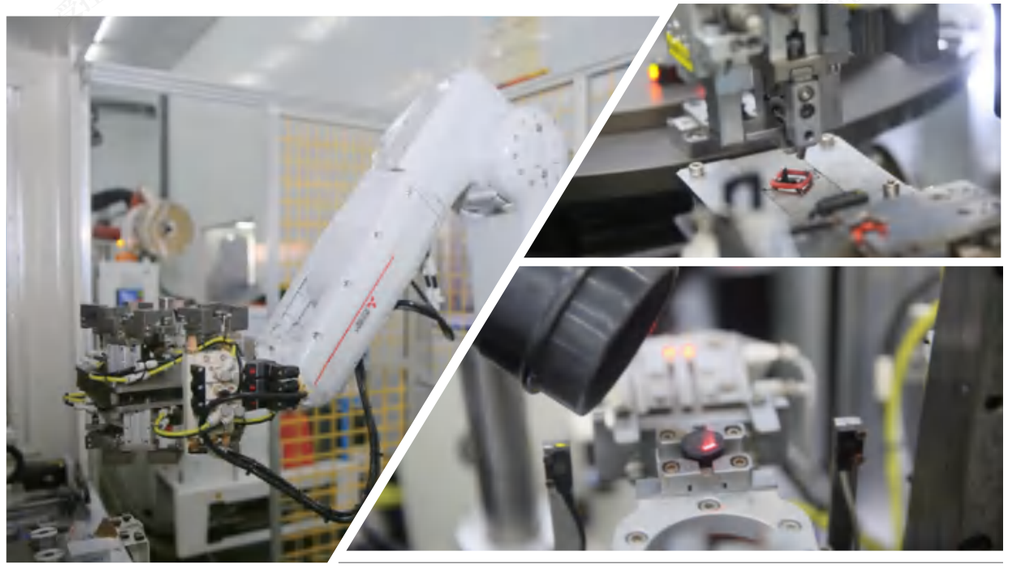

计算公式（仅供参考）/Caculation Formula(For Ref.)

N ×透气度/1Pcs= $V_{膨胀}$ ÷ t　$P_0 \times V_{膨胀} = P_1 \times V_0$

N—防水透气阀的数量(Pcs)

t—膨胀气体排出时间(min)

$V_{膨胀}$—在压差P_1=1psi(0.07Kgf/cm²)下的气体膨胀量

P_0—1大气压（1 Kgf/cm² ）

V_0—1大气压下容器的体积（L）

并满足右图的透气率和压差曲线

N ×Air permeability/1Pcs= Vexpansion ÷ t

P0×Vexpansion=P1×V0

N—Vent Valve No.s(Pcs)

t—Expansion of air discharge time.(min)

Vexpansion—P1=1psi(0.07Kgf/cm2)(expansion volume under the pressure difference)

P0—1bar pressure（1 Kgf/cm2 ）

V0—1volume with 1bar P（L）And the permeability and pressure

difference curves of the right graph are satisfied.

透气量折线图

Air Permeability

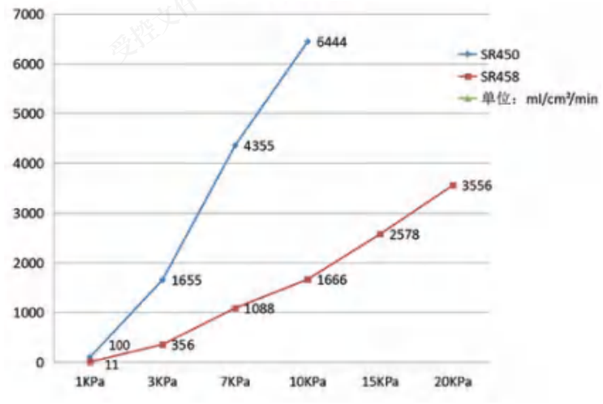

在线监测测试数值(以M12*1，5-10-68为例)

Online Test Data(take M12*1，5-10-68 as samples)

绝对压力 Absolute pressue (bar)	合格流量 Qualified flow ml/min	不合格流量 Unqualified flow ml/min	不合格流量 Unqualified flow ml/min
0.066	350–1100	325	1150
0.067	350–1100	326	1152
0.068	350–1100	330	1154
0.069	350–1100	331	1158
0.070	350–1100	335	1160
0.070	350–1100	335	1160
0.070	350–1100	335	1160
0.070	350–1100	335	1169
0.070	350–1100	335	1160
0.071	350–1100	340	1163
0.072	350–1100	342	1165
0.073	350–1100	345	1168
0.074	350–1100	348	1172

*合格品不合格品自动分拣/Qualified and non–qualified products will be divided automatically

透气阀汇总表/Air Vent Plug Summery Table

安装方式 nstallation	材料类别 Material	材 料 Material	型 号 Thread Spec.	颜 色 Colors	防护等级 IP Grade
螺纹式 Thread	塑 料 Plastic	玻 纤 /glass fiber PA66+25%	RSV-M6*0.75 RSV-M8*1.0 RSV-M10*1.0 RSV-M12*1.0 RSV-M12*1.5 RSV-M24*1.5 RSV-M40*1.5	● BL黑色 ● GY灰色 ● IG铁灰色	IP66-IP68
	金 属 Metal	铝合金 /AL alloy	RAM-M6*1.0 RAM-M8*1.0 RAM-M10*1.0 RAM-M12*1.5 RAM-M16*1.5 RAM-PG9 RAM-M20*1.5 RAM-M24*1.5 RAM-M25*1.5 RAM-M32*1.5 RAM-M40*1.5	○ BW亮白色	
		304不锈钢 /Stainless	RSM-M6*1.0 RSM-M8*1.0 RSM-M10*1.0 RSM-M12*1.5 RSM-M24*1.5 RSM-M25*1.5 RSM-M32*1.5 RSM-M40*1.5	◐ 不锈钢本色	
		黄铜/Brass H59-1	RCM-M6*1.0 RCM-M8*1.0 RCM-M10*1.0 RCM-M12*1.5 RCM-M16*1.5 RCM-PG9 RCM-M20*1.5 RCM-M24*1.5 RCM-M25*1.5 RCM-M32*1.5 RCM-M40*1.5	● MS亚光银	
卡扣式 Snap-fit	塑 料 Plastic	PA66	RSVK8.5-3.6 RSVK8.5-4.5	● BL黑色 ● GY灰色	



产品名称/Item No.	RSV-M6*0.75	RSV-M8*1.0	RSV-M10*1.0
工程编号/Descriptions*			
产品性能特性/Product Performance Characteristics			
透气量/Permeability（ml/min@0.07bar）	100–1200	150–1800	250–2700
透气膜材料/Membrane material	膨体聚四氟乙烯（ePTFE）	膨体聚四氟乙烯（ePTFE）	膨体聚四氟乙烯（ePTFE）
透气膜特性/Membrane Characteristics	疏油、疏水/Oleophobic&Hydrophobic	疏油、疏水/Oleophobic&Hydrophobic	疏油、疏水/Oleophobic&Hydrophobic
透气阀本体材料/Body Material	PA	PA	PA
颜色/Colors	● BL 黑色/Black ● GY 灰色/Grey ● IG 铁灰色/ Iron gray	● BL 黑色/Black ● GY 灰色/Grey ● IG 铁灰色/ Iron gray	● BL 黑色/Black ● GY 灰色/Grey ● IG 铁灰色/ Iron gray
扭矩扳手尺寸/Torque Wrench size	10	12	14
O型圈材料/O-ring Material	硅胶/Silica gel		
夹紧螺母材料/Clamping Nut Material	PA	PA	PA
阻燃等级/Flammability Level	V0	V0	V0
抗UV/UV resistant（1000H）	3–4 Level	3–4 Level	3–4 Level
抗中性盐雾性能/Neutral Salt Spray	–	–	–
抗菌等级Antibacterial Level（GB/T 2423.16）	1 Level	1 Level	1 Level
耐高低温/Anti High&Lowtemperature	–40℃~120℃	–40℃~120℃	–40℃~120℃
IP等级/IP Level	IP66 / IP67 / IP68	IP66 / IP67 / IP68	IP66 / IP67 / IP68
可追溯性/Traceability	√ With indepentent laser serial No.	√ With indepentent laser serial No.	√ With indepentent laser serial No.
设计和尺寸/Designs&Dimensions			
单位为毫米/Unit for Millimeter	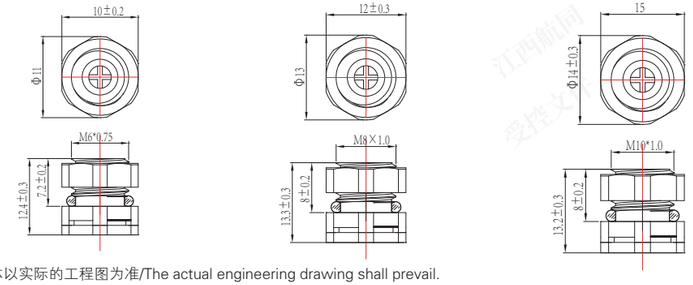		
建议扭矩/Recommended torgue	0.4±0.1N.m	0.5±0.1N.m	0.6±0.1N.m

* 具体以实际的工程图为准/The actual engineering drawing shall prevail.

RSV-... 螺纹式尼龙透气阀/Air Vent Plug(Thread type,Nylon)



产品名称 Item No.	RSV-M12*1.0	RSV-M12*1.5
工程编号/Descriptions*		
产品性能特性/Product Performance Characteristics		
透气量 Item No.（ml/min@0.07bar）	350-6000	350-6000
透气膜材料 Membrane material	膨体聚四氟乙烯（ePTFE）	膨体聚四氟乙烯（ePTFE）
透气膜特性 Membrane Characteristics	疏油、疏水/Oleophobic&Hydrophobic	疏油、疏水/Oleophobic&Hydrophobic
透气阀本体材料 Body Material	PA	PA
颜色Colors	● BL 黑色/Black ● GY 灰色/Grey ● IG 铁灰色/ Iron gray	● BL 黑色/Black ● GY 灰色/Grey ● IG 铁灰色/ Iron gray
扭矩扳手尺寸Torque Wrench size	16	16
O型圈材料O-ring Material	硅胶/Silica gel	硅胶/Silica gel
平垫圈材料/Flat Washers Material		硅胶/Silica gel
夹紧螺母材料Clamping Nut Material	PA	PA
阻燃等级Flammability Level	V0	V0
抗UV/Flammability Level（1000H）	3-4 Level	3-4 Level
抗中性盐雾性能/Neutral Salt Spray	-	-
抗菌等级Antibacterial Level（GB/T 2423.16）	1 Level	1 Level
耐高低温Anti High&Lowtemperature	-40℃~120℃	-40℃~120℃
IP等级/IP Level	IP66 / IP67 / IP68	IP66 / IP67 / IP68
可追溯性/Traceability	√ With indepentent laser serial No.	√ With indepentent laser serial No.
设计和尺寸/Designs&Dimensions		
单位为毫米/Unit for Millimeter	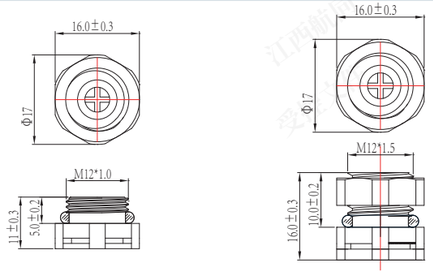	

* 具体以实际的工程图为准/The actual engineering drawing shall prevail.

建议扭矩/Recommended torgue	0.7±0.1N.m	0.7±0.1N.m	1.2±0.2N.m

RSV-... 螺纹式尼龙透气阀/Air Vent Plug(Thread type,Nylon)



产品名称/Item No.	RSV-M24*1.5	RSV-M40*1.5
工程编号/Descriptions*		
产品性能特性/Product Performance Characteristics		
透气量/Permeability（ml/min@0.07bar）	4000-40000	16000-65000
透气膜材料/Membrane material	膨体聚四氟乙烯（ePTFE）	膨体聚四氟乙烯（ePTFE）
透气膜特性/Membrane Characteristics	疏油、疏水/Oleophobic&Hydrophobic	疏油、疏水/Oleophobic&Hydrophobic
透气阀本体材料/Body Material	PA	PA
颜色/Colors	● BL 黑色/Black ● GY 灰色/Grey ● IG 铁灰色/ Iron gray	● BL 黑色/Black ● GY 灰色/Grey ● IG 铁灰色/ Iron gray
扭矩扳手尺寸/Torque Wrench size	36	58
O型圈材料/O-ring Material	硅胶/Silica gel	
平垫圈材料/Flat Washers Material		硅胶/Silica gel
夹紧螺母材料/Clamping Nut Material	PA	PA
阻燃等级/Flammability Level	V0	V0
抗UV/ UV resistant（1000H）	3-4 Level	3-4 Level
抗中性盐雾性能/Neutral Salt Spray	-	-
抗菌等级Antibacterial Level（GB/T 2423.16）	1 Level	1 Level
耐高低温/Anti High&Lowtemperature	-40℃~120℃	-40℃~120℃
IP等级/IP Level	IP66 / IP67 / IP68	IP66 / IP67 / IP68
可追溯性/Traceability	√ With indepentent laser serial No.	√ With indepentent laser serial No.
设计和尺寸/Designs&Dimensions		
单位为毫米/Unit for Millimeter	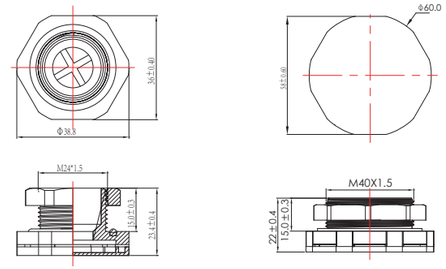	

* 具体以实际的工程图为准/The actual engineering drawing shall prevail.

建议扭矩/Recommended torgue	1.2±0.2N.m	1.8±0.2N.m

备注："D"状态表示产品待开发

卡扣式尼龙透气阀/Air Vent Plug(Snap-fit, Nylon)




产品名称/Item No.	RSVK 8.5-3.6	RSVK 8.5-4.5
工程编号/Descriptions*		
产品性能特性/Product Performance Characteristics		
透气量/Permeability（ml/min@0.07bar）	100–4000	300–6000
透气膜材料/Membrane material	膨体聚四氟乙烯（ePTFE）	膨体聚四氟乙烯（ePTFE）
透气膜特性/Membrane Characteristics	疏油、疏水/Oleophobic&Hydrophobic	疏油、疏水/Oleophobic&Hydrophobic
透气阀本体材料/Body Material	PA	PA
颜色/Colors	● BL 黑色/Black ● GY 灰色/Grey	● BL 黑色/Black ● GY 灰色/Grey
O型圈材料/O-ring Material	硅胶/Silica gel	
夹紧螺母材料/Clamping Nut Material	PA	PA
阻燃等级/Flammability Level	V0	V0
抗中性盐雾性能/Neutral Salt Spray	–	–
抗菌等级Antibacterial Level（GB/T 2423.16）	1 Level	1 Level
耐高低温/Anti High&Lowtemperature	–40℃~120℃	–40℃~120℃
IP等级/IP Level	IP66 / IP67 / IP68	IP66 / IP67 / IP68
可追溯性/Traceability	☑ With indepentent laser serial No.	☑ With indepentent laser serial No.
设计和尺寸/Designs&Dimensions		

单位为毫米/Unit for Millimeter

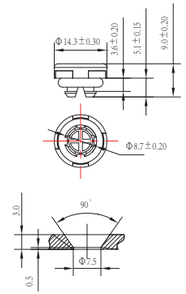

RSVK8.5-3.6安装板开孔尺寸

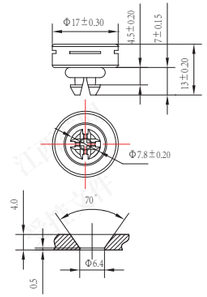

RSVK8.5-4.5安装板开孔尺寸

* 具体以实际的工程图为准/The actual engineering drawing shall prevail.

R◇M-... 螺纹式金属透气阀/Thread Metal Air Vent Plug





产品名称/Item No.	R◇M–M6*1.0	R◇M–M8*1.0	R◇M–M10*1.0
工程编号/Descriptions*			
产品性能特性/Product Performance Characteristics			
透气量/Permeability（ml/min@0.07bar）	80–1400	130–2000	180–3000
透气膜材料/Membrane material	膨体聚四氟乙烯（ePTFE）	膨体聚四氟乙烯（ePTFE）	膨体聚四氟乙烯（ePTFE）
透气膜特性/Membrane Characteristics	疏油、疏水/Oleophobic&Hydrophobic	疏油、疏水/Oleophobic&Hydrophobic	疏油、疏水/Oleophobic&Hydrophobic
透气阀本体材料/Body Material	A:铝合金/Aluminum–alloy S:不锈钢/Stainless steel C:铜/Coppe	A:铝合金/Aluminum–alloy S:不锈钢/Stainless steel C:铜/Coppe	A:铝合金/Aluminum–alloy S:不锈钢/Stainless steel C:铜/Coppe
颜色/Colors	○ BW 铝合金本色/Bright White(Alu) ◐ DS 不锈钢本色/Dark Silver (SS) ● BS 电镀镍色/Bright Silver(Nickle plating)	○ BW 铝合金本色/Bright White(Alu) ◐ DS 不锈钢本色/Dark Silver (SS) ● BS 电镀镍色/Bright Silver(Nickle plating)	○ BW 铝合金本色/Bright White(Alu) ◐ DS 不锈钢本色/Dark Silver (SS) ● BS 电镀镍色/Bright Silver(Nickle plating)
扭矩扳手尺寸/Torque Wrench size	12	14	15
O型圈材料/O-ring Material		硅胶/Silica gel	
夹紧螺母材料/Clamping Nut Material	A/S/C	A/S/C	A/S/C
阻燃等级/Flammability Level	/	/	/
抗中性盐雾性能/Neutral Salt Spray	铝/A：480H 铜/C：72H 不锈钢/S：48H	铝/A：480H 铜/C：72H 不锈钢/S：48H	铝/A：480H 铜/C：72H 不锈钢/S：48H
抗菌等级Antibacterial Level（GB/T 2423.16）	1 Level	1 Level	1 Level
耐高低温/Anti High&Lowtemperature	–40℃~120℃	–40℃~120℃	–40℃~120℃
IP等级/IP Level	IP66 / IP67 /IP68	IP66 / IP67 /IP68	IP66 / IP67 /IP68
可追溯性/Traceability	☑ With indepentent laser serial No.	☑ With indepentent laser serial No.	☑ With indepentent laser serial No.
设计和尺寸/Designs&Dimensions			
单位为毫米/Unit for Millimeter			

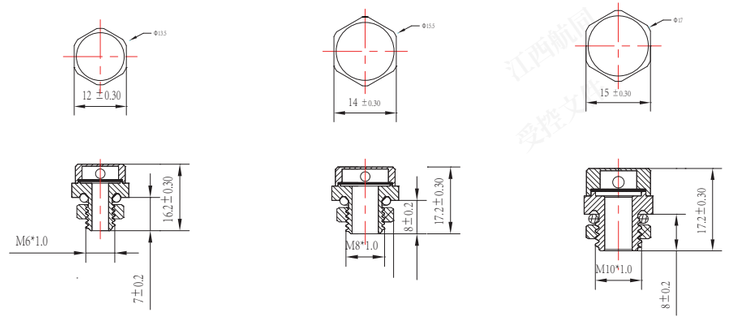

* 具体以实际的工程图为准/The actual engineering drawing shall prevail.

建议扭矩/Recommended torgue	0.8±0.1N.m	1.0±0.1N.m	1.2±0.1N.m

R◇M-... 螺纹式金属透气阀/Thread Metal Air Vent Plug





产品名称/Item No.	R◇M–M12*1.5	R◇M–M16*1.5	R◇M–M20*1.5
工程编号/Descriptions*			
产品性能特性/Product Performance Characteristics			
透气量/Permeability（ml/min@0.07bar）	250–6000	500–8000	800–10000
透气膜材料/Membrane material	膨体聚四氟乙烯（ePTFE）	膨体聚四氟乙烯（ePTFE）	膨体聚四氟乙烯（ePTFE）
透气膜特性/Membrane Characteristics	疏油、疏水/Oleophobic&Hydrophobic	疏油、疏水/Oleophobic&Hydrophobic	疏油、疏水/Oleophobic&Hydrophobic
透气阀本体材料/Body Material	A:铝合金/Aluminum–alloy S:不锈钢/Stainless steel C:铜/Coppe	A:铝合金/Aluminum–alloy S:不锈钢/Stainless steel C:铜/Coppe	A:铝合金/Aluminum–alloy S:不锈钢/Stainless steel C:铜/Coppe
颜色/Colors	○ BW 铝合金本色/Bright White(Alu) ◐ DS 不锈钢本色/Dark Silver (SS) ● BS 电镀镍色/Bright Silver(Nickle plating)	○ BW 铝合金本色/Bright White(Alu) ◐ DS 不锈钢本色/Dark Silver (SS) ● BS 电镀镍色/Bright Silver(Nickle plating)	○ BW 铝合金本色/Bright White(Alu) ◐ DS 不锈钢本色/Dark Silver (SS) ● BS 电镀镍色/Bright Silver(Nickle plating)
扭矩扳手尺寸/Torque Wrench size	17	28	28
O型圈材料/O-ring Material		硅胶/Silica gel	
夹紧螺母材料/Clamping Nut Material	A/S/C	A/S/C	A/S/C
阻燃等级/Flammability Level	/	/	/
抗中性盐雾性能/Neutral Salt Spray	铝/A：480H 铜/C：72H 不锈钢/S：48H	铝/A：480H 铜/C：72H 不锈钢/S：48H	铝/A：480H 铜/C：72H 不锈钢/S：48H
抗菌等级Antibacterial Level（GB/T 2423.16）	1 Level	1 Level	1 Level
耐高低温/Anti High&Lowtemperature	–40℃~120℃	–40℃~120℃	–40℃~120℃
IP等级/IP Level	IP66 / IP67 /IP68	IP66 / IP67 /IP68	IP66 / IP67 /IP68
可追溯性/Traceability	☑ With independent laser serial No.	☑ With independent laser serial No.	☑ With independent laser serial No.
设计和尺寸/Designs&Dimensions 单位为毫米/Unit for Millimeter	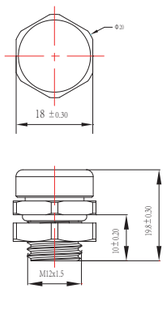	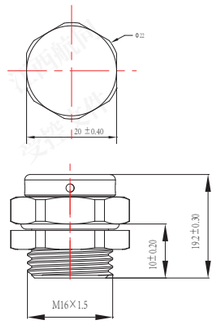	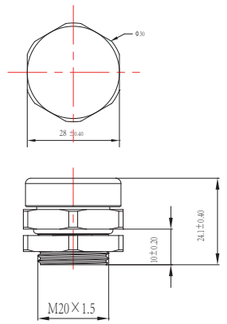
建议扭矩/Recommended torgue	1.4±0.1N.m	1.8±0.2N.m	2.2±0.2N.m

* 具体以实际的工程图为准/The actual engineering drawing shall prevail.

R◇M-... 螺纹式金属透气阀/Thread Metal Air Vent Plug





产品名称/Item No.	R◇M–M24*1.5	R◇M–M25*1.5	R◇M–M32*1.5
工程编号/Descriptions*			
产品性能特性/Product Performance Characteristics			
透气量/Permeabilityml/min@0.07bar）	1000–2000	12000–25000	1800–30000
透气膜材料/Membrane material	膨体聚四氟乙烯（ePTFE）	膨体聚四氟乙烯（ePTFE）	膨体聚四氟乙烯（ePTFE）
透气膜特性/Membrane Characteristics	疏油、疏水/Oleophobic&Hydrophobic	疏油、疏水/Oleophobic&Hydrophobic	疏油、疏水/Oleophobic&Hydrophobic
透气阀本体材料/Body Material	A:铝合金/Aluminum–alloy S:不锈钢/Stainless steel C:铜/Coppe	A:铝合金/Aluminum–alloy S:不锈钢/Stainless steel C:铜/Coppe	A:铝合金/Aluminum–alloy S:不锈钢/Stainless steel C:铜/Coppe
颜色/Colors	○ BW 铝合金本色/Bright White(Alu) ◐ DS 不锈钢本色/Dark Silver (SS) ● BS 电镀镍色/Bright Silver(Nickle plating)	○ BW 铝合金本色/Bright White(Alu) ◐ DS 不锈钢本色/Dark Silver (SS) ● BS 电镀镍色/Bright Silver(Nickle plating)	○ BW 铝合金本色/Bright White(Alu) ◐ DS 不锈钢本色/Dark Silver (SS) ● BS 电镀镍色/Bright Silver(Nickle plating)
扭矩扳手尺寸/Torque Wrench size	28	48	36
O型圈材料/O-ring Material			硅胶/Silica gel
夹紧螺母材料/Clamping Nut Material	A/S/C	A/S/C	A/S/C
阻燃等级/Flammability Level	/	/	/
抗中性盐雾性能/Neutral Salt Spray	铝/A：480H 铜/C：72H 不锈钢/S：48H	铝/A：480H 铜/C：72H 不锈钢/S：48H	铝/A：480H 铜/C：72H 不锈钢/S：48H
抗菌等级Antibacterial Level（GB/T 2423.16）	1 Level	1 Level	1 Level
耐高低温/Anti High&Lowtemperature	–40℃~120℃	–40℃~120℃	–40℃~120℃
IP等级/IP Level	IP66 / IP67 /IP68	IP66 / IP67 /IP68	IP66 / IP67 /IP68
可追溯性/Traceability	☑ With independent laser serial No.	☑ With independent laser serial No.	☑ With independent laser serial No.
设计和尺寸/Designs&Dimensions 单位为毫米/Unit for Millimeter	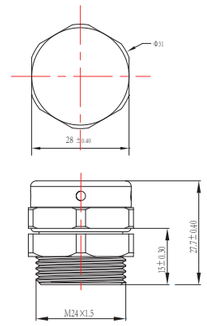	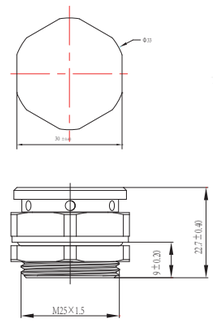	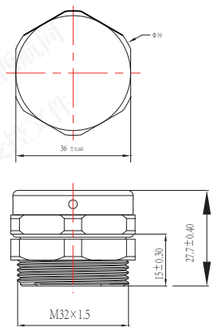
建议扭矩/Recommended torgue	2.4±0.2N.m	2.4±0.2N.m	3.0±0.2N.m

* 具体以实际的工程图为准/The actual engineering drawing shall prevail.

R◇M-... 螺纹式金属透气阀/Thread Metal Air Vent Plug



产品名称/Item No.	R◇M–M40*1.5
工程编号/Descriptions*	
产品性能特性/Product Performance Characteristics	
透气量/Permeability（ml/min@0.07bar）	7000–40000
透气膜材料/Membrane material	膨体聚四氟乙烯（ePTFE）
透气膜特性/Membrane Characteristics	疏油、疏水/Oleophobic&Hydrophobic
透气阀本体材料/Body Material	铝合金 A 不锈钢 S 铜 C
颜色/Colors	○ BW 铝合金本色/Bright White(Alu) ◐ DS 不锈钢本色/Dark Silver (SS) ● BS 电镀镍色/Bright Silver(Nickle plating)
扭矩扳手尺寸/Torque Wrench size	48
O型圈材料/O-ring Material	
夹紧螺母材料/Clamping Nut Material	A/S/C
阻燃等级/Flammability Level	/
抗中性盐雾性能/Neutral Salt Spray	铝/A：480H 铜/C：72H 不锈钢/S：48H
抗菌等级Antibacterial Level（GB/T 2423.16）	1 Level
耐高低温/Anti High&Lowtemperature	–40℃~120℃
IP等级/IP Level	IP66 / IP67 /IP68
可追溯性/Traceability	☑ With indepentent laser serial No.

设计和尺寸/Designs&Dimensions

单位为毫米/Unit for Millimeter

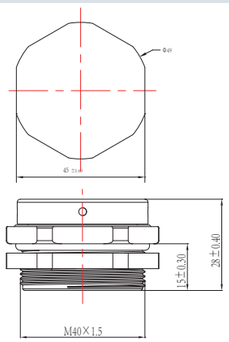

* 具体以实际的工程图为准/The actual engineering drawing shall prevail.

建议扭矩/Recommended torgue	3.6±0.2N.m

R... 系列防爆透气阀

Explosion-Proof Breather Valve Series

CE IP68 RoHS

· 防水、防尘、防油污，防护等级高。
· 耐化学剂、耐高低温、抗老化等，提高产品苛刻环境中的可靠性。
· 外部防泥沙侵入、内部防止结露，提高产品使用寿命。
· 微散热及平衡压差。提高产品的完整性。

· High IP rating for water, dust, and oil resistance.
· Excellent resistance to chemicals, extreme temperatures, and aging, ensuring high reliability in harsh environments.
· Prevents external sand/dirt intrusion and internal condensation, extending the product's service life.
· Micro–ventilation for heat dissipation and pressure equalization, enhancing overall product integrity.



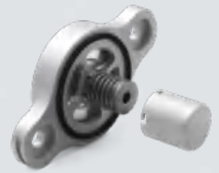

RSV 尼龙螺纹透气阀规格命名方法
Screw–in Nylon Air Vent plug Coding Rules

RSV-M32*1.5-12-FSFB-BK-PM-66

- 防护等级/ IP Grade
- O:O型圈，P:平垫圈，M是螺母（可选）
  O–ring，Plain washer,M–Nut（selectable）
- 颜色/ Colors
- 阀式防爆/Explosion–proof valve
- 螺纹长度 / Thread Length
- 螺纹规格 / Thread Spec.
- 类别 / Type

RSV 尼龙法兰类透气阀命名方法
Naming Method for Nylon Flange Breathable Valves

RSV-23.5*23.5*M4-FSFB- BK - P - 67

- 防护等级/ IP Grade
- O:O型圈，P:平垫圈
  O–ring，Plain washer
- 颜色/ Colors
- 阀式防爆/Explosion–proof valve
- 螺纹制式 / Thread Standard
- 安装尺寸 / Installation Size
- 类别 / Type

R◇M 金属螺纹透气阀规格命名方法
Screw–in Metal Air Vent plug Coding Rules

R◇M - M40*1.5-12-FSFB(D)-MG-PM-67

- 防护等级/ IP Grade
- O:O型圈，P:平垫圈，M是螺母（可选）
  O–ring，Plain washer,M–Nut（selectable）
- 颜色/ Colors:BW,MG
- 阀式防爆/Explosion–proof valve
- 螺纹长度 / Thread Length
- 螺纹规格 / Thread Spec.
- 类别 / Type:RAM, RSM,RCM

R◇M 金属防爆透气阀法兰类命名方法
Flange Metal Burst–proof Air Vent Plug Coding Rules

R◇M-23.5*23.5*M4-FSFB(D)-MG - P- 67

- 防护等级/ IP Grade
- P:平垫圈/Plain washer
- 颜色/ Colors
- 阀式防爆/
  Brust–proof Valve Type
- 螺纹制式/Thread type
- 安装尺寸/Installation size
- 类别 / Type:
  RAM, RSM,RCM



防爆阀选型指南/Explosion-Proof Valve Selection Guide

透气量计算

计算一个PACK包从T_1升温到T_2时膨胀气体体积$V_{膨}$(L)

公式一：$V_{膨}=[(T_2-T_1)*Y]*V_{净}$

Y—膨胀系数（1/273）

T_1—相对低的温度(℃)

T_2—相对高的温度(℃)

$V_{净}$—PACK内空腔体积(L)

计算透气量Q(L/min)

公式二：$Q= V_{膨} \div t*1.5$

t—从T_1升温到T_2所需要的时间（min）

1.5—安全系数

Breathability Calculation

1. Calculate the expanded gas volume (Verp) when a PACK heats up from T_1 to T_2:Formula 1:$V_{erp} = [(T_2 - T_1) \times Y] \times V_{net}$

- Y: Expansion coefficient (1/273)
- T_1: Lower temperature (℃)
- T_2: Higher temperature (℃)
- V_{net}: Net cavity volume of the PACK (L)

2. Calculate the breathability (Q):

Formula 2:$Q=(V_{erp} \div t) \times 1.5$

t: Time required for the temperature to rise from T_1 to T_2(min)

1.5: Safety factor

开启压力计算（P开Kpa）

公式四：$P_{开} \leqslant P_{max}*0.8$

$P_{开}$—开启压力KPa

P_{max}—客户PACK包能承受的最大压强KPa

Opening Pressure Calculation (Popen in kPa)

Formula 4: $P_{open} \leqslant P_{max} \times 0.8$

P_{open} : Opening pressure (kPa)

P_{max} : Maximum pressure that the customer's PACK can withstand (kPa)

爆破后的泄压量计算（在xxkpa下的流量值）

锂电池热失控与热扩散是一个复杂的多因素构成的失效现象。

为了方便计算，仅考虑以下因素:

1、N个电芯同时爆炸热扩散是否会影响到周围电芯；$V_{失}=N* V_{单}$ L/s =N*60* $V_{单}$ L/min； $V_{单}$–单个电芯失效的产气速率（客户提供）

$V_{失}$–电芯失效的产气速率：

$N_{串}$–单个电池包电芯串联数量（客户提供）

注：

$N_{串} \leqslant 8$：N=1个电芯热失控计算

$8 < N_{串} \leqslant 16$：N=2个电芯热失控计算

$16 < N_{串} \leqslant 32$：N=3个电芯热失控计算

$N_{串} > 32$：N=5个电芯热失控计算

Pressure Relief Volume Calculation After Rupture (Flow Rate at xx kPa)

Lithium battery thermal runaway and thermal propagation are complex failure phenomena involvingmultiple factors.

To simplify the calculation, only the following factors are considered:

1. Whether the simultaneous explosion and thermal propagation of N cells will affect thesurrounding cells:

Vfail = N x Vsingle L/s = N x 60 x Vsingle L/min;(Vsingle = gas generation rate of a single cell during failure, provided by the customer)

Vfail : Gas generation rate during cell failure.

N_series: Number of cells connected in series in a single battery pack (provided by the customer).

Note:

- $N_s \leqslant 8$: Calculate based on the thermal runaway of N=1 cell.
- $8 < N_s \leqslant 16$: Calculate based on the thermal runaway of N=2 cells.
- $16 < N_s \leqslant 32$: Calculate based on the thermal runaway of N=3 cells.
- $N_s > 32$: Calculate based on the thermal runaway of N=5 cells.







产品名称/Item No.	RSV-M20*1.5-10-FSFB-BK-PM-67	RSV-23.5*23.5*M4-FSFB1-BK-P-67
工程编号/Descriptions*		
产品性能特性/Product Performance Characteristics		
透气量/Permeability（ml/min@1.5KPa）	＞300	＞1000
防爆压力/ Explosion–proof pressure：	4 ± 1 KPa	4 ± 1 KPa
排气面积/Leaving area（Max）：	120mm²	580mm²
透气膜材料/Membrane material	膨体聚四氟乙烯（ePTFE）	膨体聚四氟乙烯（ePTFE）
透气膜特性/Membrane Characteristics	疏油、疏水/Oleophobic&Hydrophobic	疏油、疏水/Oleophobic&Hydrophobic
透气阀本体材料/Body Material	PA –	PA –
颜色/Colors	● BL 黑色/Black ● –	BL 黑色/Black –
扭矩扳手尺寸/Torque Wrench size	44	44
平垫圈材料/Flat Washers Material	硅胶/Silica gel	硅胶/Silica gel
夹紧螺母材料/Clamping Nut Material	PA	PA
阻燃等级/Flammability Level	V0	V0
抗中性盐雾性能/Neutral Salt Spray	–	–
抗菌等级Antibacterial Level（GB/T 2423.16）	1 Level	1 Level
耐高低温/Anti High&Lowtemperature	–40℃~125 ℃	–40℃~120℃
IP等级/IP Level	IP67	IP67
可追溯性/Traceability	☑ With indepentent laser serial No.	√ With indepentent laser serial No.
设计和尺寸/Designs&Dimensions 单位为毫米/Unit for Millimeter	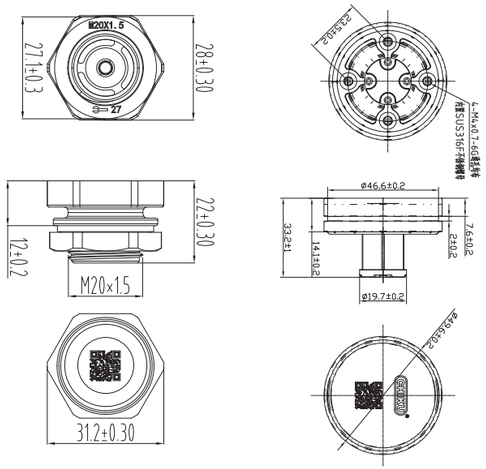	
* 具体以实际的工程图为准/The actual engineering drawing shall prevail.		
建议扭矩/Recommended torgue	1.5±0.2N.m	1.5±0.2N.m

RSV-... 阀式防爆透气阀/Burst-proof breathable valve





产品名称/Item No.	RSV-M32*1.5-10-FSFB-BK-OM-67	RSV-M32*1.5-12-FSFB-BK-OM-67	RSV-M40*1.5-12-FSFB-BK-PM-67
工程编号/Descriptions*			
产品性能特性/Product Performance Characteristics			
透气量/Permeability（ml/min@1.5KPa）	>500	>500	> 1000
防爆压力/ Explosion–proof pressure：	4–8 KPa	4–8 KPa	4 ± 1 KPa
排气面积/Leaving area（Max）：	310mm^2	310mm^2	630mm^2
透气膜材料/Membrane material	膨体聚四氟乙烯（ePTFE）	膨体聚四氟乙烯（ePTFE）	膨体聚四氟乙烯（ePTFE）
透气膜特性/Membrane Characteristics	疏油、疏水/Oleophobic&Hydrophobic	疏油、疏水/Oleophobic&Hydrophobic	疏油、疏水/Oleophobic&Hydrophobic
透气阀本体材料/Body Material	PA –	PA –	PA –
颜色/Colors	● BL 黑色/Black ● –	● BL 黑色/Black ● –	BL 黑色/Black –
扭矩扳手尺寸/Torque Wrench size	44	44	44
平垫圈材料/Flat Washers Material	硅胶/Silica gel	硅胶/Silica gel	硅胶/Silica gel
夹紧螺母材料/Clamping Nut Material	PA	PA	PA
阻燃等级/Flammability Level	V0	V0	V0
抗中性盐雾性能/Neutral Salt Spray	–	–	–
抗菌等级Antibacterial Level（GB/T 2423.16）	1 Level	1 Level	1 Level
耐高低温/Anti High&Lowtemperature	–40℃~120℃	–40℃~120℃	–40℃~125 ℃
IP等级/IP Level	IP67	IP67	IP67
可追溯性/Traceability	☑ With independent laser serial No.	☑ With independent laser serial No.	√ With independent laser serial No.
设计和尺寸/Designs&Dimensions 单位为毫米/Unit for Millimeter	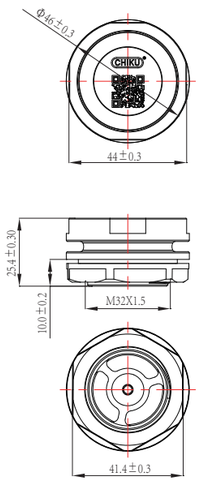	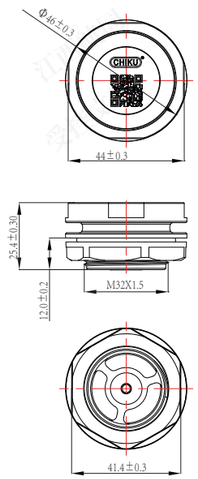	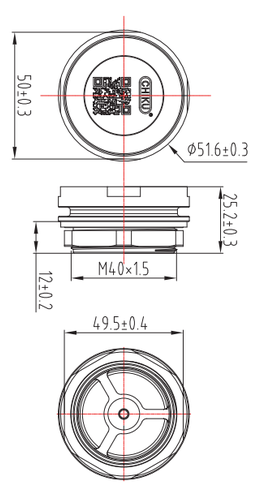
建议扭矩/Recommended torgue	1.5±0.2N.m	1.5±0.2N.m	1.5±0.2N.m

* 具体以实际的工程图为准/The actual engineering drawing shall prevail.

RAM-... 金属防爆透气阀/Metal burst-proof breathable valve





产品名称/Item No.	RAM-M16*1.5-12-FSFB-MW-PM-6x	RAM-M20*1.5-12-FSFB-MW-PM-6x	RAM-M32*1.5-12-FSFB-MW-PM-6x
工程编号/Descriptions*			
产品性能特性/Product Performance Characteristics			
透气量/Permeability（ml/min@1.5KPa）	>100	>500	>500
防爆压力/ Explosion–proof pressure：	8–13 KPa	8–13 KPa	4–8 KPa
排气面积/Leaving area（Max）：	42mm^2	120mm^2	350mm^2
透气膜材料/Membrane material	膨体聚四氟乙烯（ePTFE）	膨体聚四氟乙烯（ePTFE）	膨体聚四氟乙烯（ePTFE）
透气膜特性/Membrane Characteristics	疏油、疏水/Oleophobic&Hydrophobic	疏油、疏水/Oleophobic&Hydrophobic	疏油、疏水/Oleophobic&Hydrophobic
透气阀本体材料/Body Material	A:铝合金/Aluminum–alloy –	A:铝合金/Aluminum–alloy –	A:铝合金/Aluminum–alloy –
颜色/Colors	○ MW 铝合金本色/Matte White(Alu) ● MG 铝合金哑灰/Matte Grey	○ MW 铝合金本色/Matte White(Alu) ● MG 铝合金哑灰/Matte Grey	○ MW 铝合金本色/Matte White(Alu) ● MG 铝合金哑灰/Matte Grey
扭矩扳手尺寸/Torque Wrench size	20	28	32
平垫圈材料/Flat Washers Material	硅胶/Silica gel		
夹紧螺母材料/Clamping Nut Material	A	A	A
阻燃等级/Flammability Level	V0	V0	V0
抗中性盐雾性能/Neutral Salt Spray	720H	720H	720H
抗菌等级Antibacterial Level（GB/T 2423.16）	1 Level	1 Level	1 Level
耐高低温/Anti High&Lowtemperature	–40℃~125℃	–40℃~125℃	–40℃~125℃
IP等级/IP Level	IP67 / IP68	P67 / IP68	P67 / IP68
可追溯性/Traceability	☑ With independent laser serial No.	☑ With independent laser serial No.	☑ With independent laser serial No.
设计和尺寸/Designs&Dimensions 单位为毫米/Unit for Millimeter	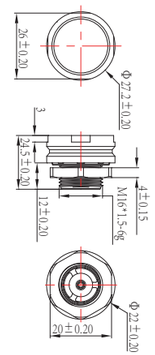	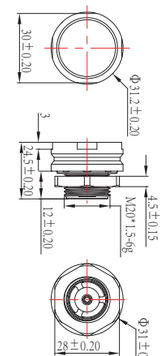	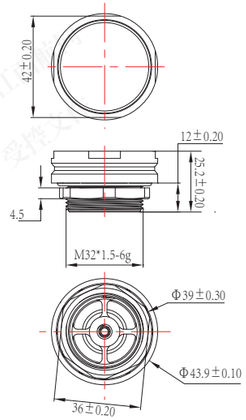
建议扭矩/Recommended torgue	2.2-2.4N.m	2.2-2.4N.m	3-3.5N.m

* 具体以实际的工程图为准/The actual engineering drawing shall prevail.

RAM-... 金属防爆透气阀/Metal burst-proof breathable valve



产品名称/Item No.	RAM-M40*1.5-12-FSFB-MW-PM-6x	RAM-23.5*23.5*M4-FSFB-MW-P-6x	RAM-33.2*M4-FSFB-MW-P-6x
工程编号/Descriptions*			
产品性能特性/Product Performance Characteristics			
透气量/Permeability（ml/min@1.5KPa）	>500	>500	>500
防爆压力/ Explosion-proof pressure：	4–8 KPa	4–8 KPa	4 ± 1 KPa
排气面积/Leaving area（Max）：	540mm^2	580mm^2	650mm^2
透气膜材料/Membrane material	膨体聚四氟乙烯（ePTFE）	膨体聚四氟乙烯（ePTFE）	膨体聚四氟乙烯（ePTFE）
透气膜特性/Membrane Characteristics	疏油、疏水/Oleophobic&Hydrophobic	疏油、疏水/Oleophobic&Hydrophobic	疏油、疏水/Oleophobic&Hydrophobic
透气阀本体材料/Body Material	A:铝合金/Aluminum–alloy –	A:铝合金/Aluminum–alloy –	A:铝合金/Aluminum–alloy –
颜色/Colors	○ MW 铝合金本色/Matte White(Alu) ● MG 铝合金哑灰/Matte Grey	○ MW 铝合金本色/Matte White(Alu) ● MG 铝合金哑灰/Matte Grey	○ MW 铝合金本色/Matte White(Alu) ● MG 铝合金哑灰/Matte Grey
扭矩扳手尺寸/Torque Wrench size	45	–	–
平垫圈材料/Flat Washers Material			
夹紧螺母材料/Clamping Nut Material	A	A	A
阻燃等级/Flammability Level	V0	V0	V0
抗中性盐雾性能/Neutral Salt Spray	720H	720H	720H
抗菌等级Antibacterial Level（GB/T 2423.16）	1 Level	1 Level	1 Level
耐高低温/Anti High&Lowtemperature	–40℃~125℃	–40℃~125℃	–40℃~125℃
IP等级/IP Level	P67 / IP68	P67 / IP68	P67 / IP68
可追溯性/Traceability	☑ With indepentent laser serial No.	☑ With indepentent laser serial No.	☑ With indepentent laser serial No.
设计和尺寸/Designs&Dimensions			
单位为毫米/Unit for Millimeter			

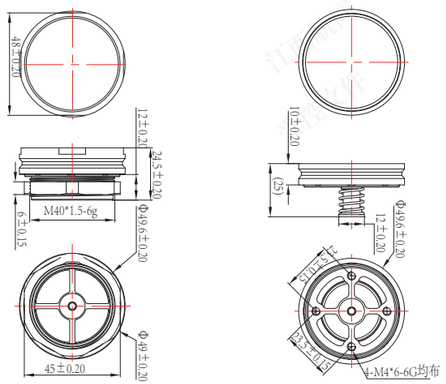

* 具体以实际的工程图为准/The actual engineering drawing shall prevail.

建议扭矩/Recommended torgue	3.6-3.8N.m	2.2-2.4N.m	1.6-1.8N.m

RAM-... 金属防爆透气阀/Metal burst-proof breathable valve



产品名称/Item No.	RAM-37.4*37.4*M5-FSFB-MW-P-6x	RAM-55.8*M5-FSFB-MW-P-6x	RAM-77*M5-FSFB-MW-P-6x
工程编号/Descriptions*			
产品性能特性/Product Performance Characteristics			
透气量/Permeability（ml/min@1.5KPa）	>1000	>500	>800
防爆压力/ Explosion-proof pressure：	4 ± 1 KPa	4 ± 1KPa	4 ± 1 KPa
排气面积/Leaving area（Max）：	1760mm^2	350mm^2	850mm^2
透气膜材料/Membrane material	膨体聚四氟乙烯（ePTFE）	膨体聚四氟乙烯（ePTFE）	膨体聚四氟乙烯（ePTFE）
透气膜特性/Membrane Characteristics	疏油、疏水/Oleophobic&Hydrophobic	疏油、疏水/Oleophobic&Hydrophobic	疏油、疏水/Oleophobic&Hydrophobic
透气阀本体材料/Body Material	A:铝合金/Aluminum–alloy –	A:铝合金/Aluminum–alloy –	A:铝合金/Aluminum–alloy –
颜色/Colors	○ MW 铝合金本色/Matte White(Alu) ● MG 铝合金哑灰/Matte Grey	○ MW 铝合金本色/Matte White(Alu) ● MG 铝合金哑灰/Matte Grey	○ MW 铝合金本色/Matte White(Alu) ● MG 铝合金哑灰/Matte Grey
扭矩扳手尺寸/Torque Wrench size	–	–	–
平垫圈材料/Flat Washers Material		硅胶/Silica gel	
夹紧螺母材料/Clamping Nut Material	A	A	A
阻燃等级/Flammability Level	V0	V0	V0
抗中性盐雾性能/Neutral Salt Spray	720H	720H	720H
抗菌等级Antibacterial Level（GB/T 2423.16）	1 Level	1 Level	1 Level
耐高低温/Anti High&Lowtemperature	–40℃~125℃	–40℃~125℃	–40℃~125℃
IP等级/IP Level	P67 / IP68	P67 / IP68	P67 / IP68
阻湿性/Moisture barrier property	☑	☑	☑
可追溯性/Traceability	☑ With indepentent laser serial No.	☑ With indepentent laser serial No.	☑ With indepentent laser serial No.
设计和尺寸/Designs&Dimensions			
单位为毫米/Unit for Millimeter			

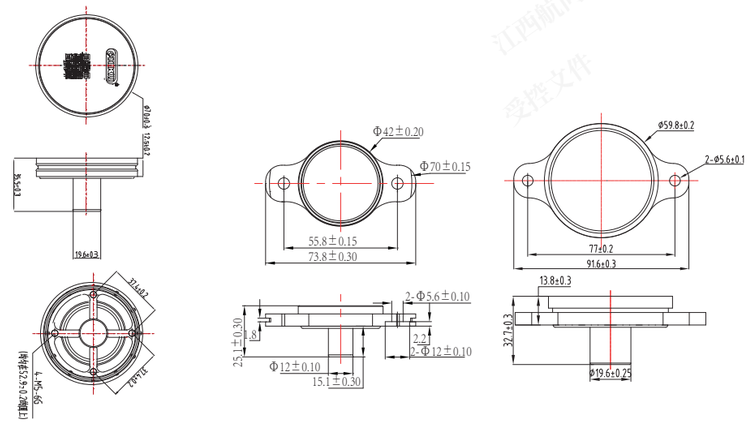

* 具体以实际的工程图为准/The actual engineering drawing shall prevail.

建议扭矩/Recommended torgue	1.6-1.8N.m	3.6-3.8N.m	2.2-2.4N.m

RAM-... 金属防爆透气阀/Metal burst-proof breathable valve





产品名称/Item No.	RAM-150X7-FSFB-MW-P-66	RAM-150X7-FSFB1-MW-P-66
工程编号/Descriptions*		
产品性能特性/Product Performance Characteristics		
透气量/Permeability（ml/min@1.5KPa）	>2500	>2500
防爆压力/ Explosion-proof pressure：	4.5±1KPa	4.5±1KPa
排气面积/Leaving area（Max）：	5400mm^2	2500mm^2
透气膜材料/Membrane material	膨体聚四氟乙烯（ePTFE）	膨体聚四氟乙烯（ePTFE）
透气膜特性/Membrane Characteristics	疏油、疏水/Oleophobic&Hydrophobic	疏油、疏水/Oleophobic&Hydrophobic
透气阀本体材料/Body Material	A:铝合金/Aluminum-alloy –	A:铝合金/Aluminum-alloy –
颜色/Colors	○ BW 铝合金本色/Bright White(Alu)	○ BW 铝合金本色/Bright White(Alu)
平垫圈材料/Flat Washers Material	硅胶/Silica gel	
阻燃等级/Flammability Level	V0	V0
抗中性盐雾性能/Neutral Salt Spray	720H	720H
耐高低温/Anti High&Lowtemperature	-40℃~125℃	-40℃~125℃
IP等级/IP Level	IP66	IP66
可追溯性/Traceability	☑ With indepentent laser serial No.	☑ With indepentent laser serial No.

设计和尺寸/Designs&Dimensions

单位为毫米/Unit for Millimeter

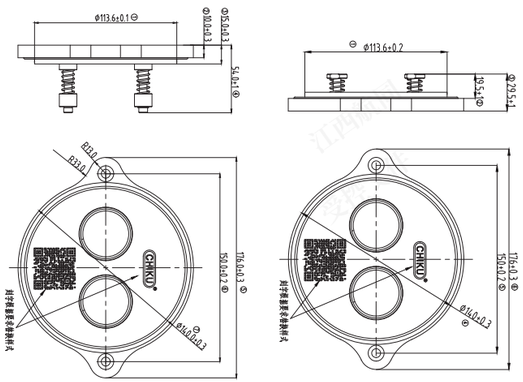

* 具体以实际的工程图为准/The actual engineering drawing shall prevail.

RAM-... 电控金属防爆透气阀/Metal burst-proof breathable valve



* 带排气风扇 / With an exhaust fan



* 带吸气风扇 /
With an intake fan



产品名称/Item No.	RAM-150X7-FSFB(E)-MW-P-66	RAM-150X7-FSFB(E1)-MW-P-66	RAM-150*7-FSFB(E4)-MW-P-66
工程编号/Descriptions*			
产品性能特性/Product Performance Characteristics			
透气量/Permeability（ml/min@1.5KPa）	>2500	>2500	>2500
防爆压力/ Explosion-proof pressure：	4.5±1KPa	4.5±1KPa	4.5±1KPa
排气面积/Leaving area（Max）：	2500mm^2	2500mm^2	2500mm^2
透气膜材料/Membrane material	膨体聚四氟乙烯（ePTFE）	膨体聚四氟乙烯（ePTFE）	膨体聚四氟乙烯（ePTFE）
透气膜特性/Membrane Characteristics	疏油、疏水/Oleophobic&Hydrophobic	疏油、疏水/Oleophobic&Hydrophobic	疏油、疏水/Oleophobic&Hydrophobic
透气阀本体材料/Body Material	A:铝合金/Aluminum-alloy –	A:铝合金/Aluminum-alloy –	A:铝合金/Aluminum-alloy –
颜色/Colors	○ BW 铝合金本色/Bright White(Alu)	○ BW 铝合金本色/Bright White(Alu)	○ BW 铝合金本色/Bright White(Alu)
平垫圈材料/Flat Washers Material	硅胶/Silica gel		
阻燃等级/Flammability Level	V0	V0	V0
抗中性盐雾性能/Neutral Salt Spray	外部/ Exterior 720H 内部/ Interior 72H	外部/ Exterior 720H 内部/ Interior 72H	外部/ Exterior 720H 内部/ Interior 72H
耐高低温/Anti High&Lowtemperature	-40℃-65℃	-40℃-65℃	-40℃-65℃
IP等级/IP Level	IP66	IP66	IP66
可追溯性/Traceability	☑ With indepentent laser serial No.	☑ With indepentent laser serial No.	☑ With indepentent laser serial No.

设计和尺寸/Designs&Dimensions

单位为毫米/Unit for Millimeter

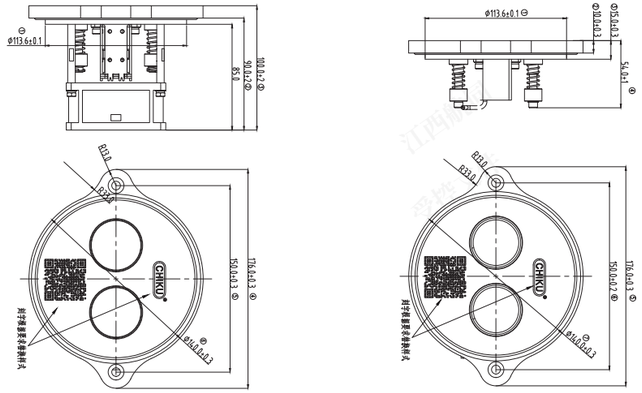

* 具体以实际的工程图为准/The actual engineering drawing shall prevail.

RAM-150... 消防安全阀/Safety valve for fire protection





* 带风扇 / With fan

产品名称/Item No.	RAM-150*7-FSFB(DE1)-MW-UL-P-66	RAM-150*7-FSFB(DE2)-MW-UL-P-66
物料编码/Descriptions*	103030290	103030282
产品性能特性/Product Performance Characteristics		
材质/ Material	铝合金	铝合金
开启行程/Opening distance：	完全弹开	完全弹开
开启压力/Actuation pressure	-	-
开启后排气面积/Exhaust area（Max）：	4000mm²	4000mm²
开启速度（mm/s）/Speed boost	瞬间弹开	瞬间弹开
抗中性盐雾性能/Neutral Salt Spray	外部/ Exterior 720H	外部/ Exterior 720H
	内部/ Interior 72H	内部/ Interior 72H
风扇尺寸(mm)	80*80*38	-
适用温度/Applicable Temperature	-40℃～80℃	-40℃～80℃
通电时长(s)	＜1	＜1
电压(V)	24	24
功率(W)	11	-
IP等级/IP Level	IP66	IP66
可追溯性/Traceability	√	√

设计和尺寸/Designs&Dimensions

单位为毫米/Unit for Millimeter

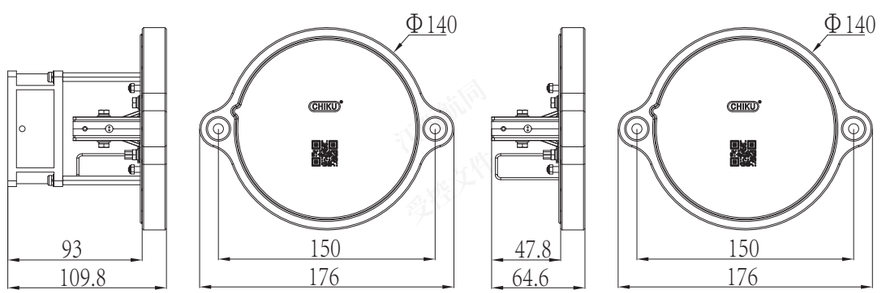

RAM-150*7-FSFB(DE1)-MW-UL-P-66　　RAM-150*7-FSFB(DE2)-MW-UL-P-66

* 具体以实际的工程图为准/The actual engineering drawing shall prevail.

RAM-160... 消防安全阀/Safety valve for fire protection





产品名称/Item No.	RXM-160x18-FSFB-MW-O-66	RAM-160*7-FSFB(DE1)-MW-UL-O-66
物料编码/Descriptions*	103030273	103030286
产品性能特性/Product Performance Characteristics		
材质/ Material	铝合金	铝合金
开启行程/Opening distance：	完全弹开	完全弹开
开启压力/Actuation pressure	8±2 kPa	-
开启后排气面积/Exhaust area（Max）：	25000mm²	25000mm²
开启速度/Speed boost	瞬间弹开	瞬间弹开
抗中性盐雾性能/Neutral Salt Spray	外部/ Exterior 720H	外部/ Exterior 720H
	内部/ Interior 72H	内部/ Interior 72H
风扇尺寸(mm)	-	-
适用温度/Applicable Temperature	-40℃～85℃	-40℃～80℃
通电时长(s)	无需通电	＜1
电压(V)	-	24
功率(W)	-	-
IP等级/IP Level	IP66	IP66
可追溯性/Traceability	√	√

设计和尺寸/Designs&Dimensions

单位为毫米/Unit for Millimeter

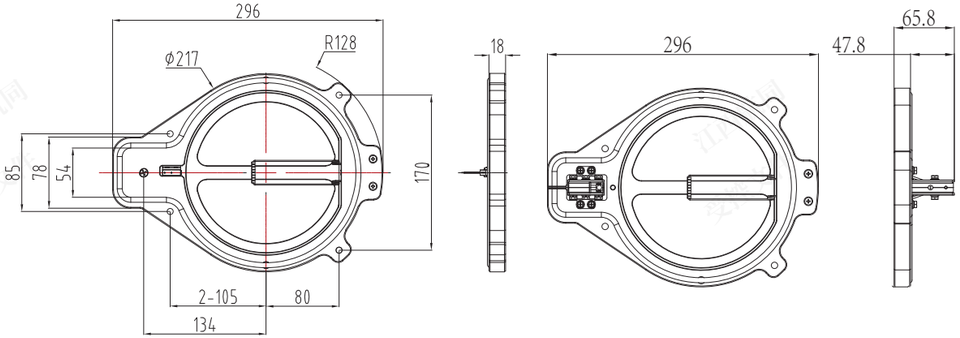

XM-160x18-FSFB-MW-O-66　　RAM-160*7-FSFB(DE1)-MW-UL-O-66

* 具体以实际的工程图为准/The actual engineering drawing shall prevail.

RAM-230... 消防安全阀/Safety valve for fire protection





* 带风扇 / With fan

产品名称/Item No.	RAM-230x8-FSFB(E)-MW-O-66	RAM-230x8-FSFB(E1)-MW-O-66
物料编码/Descriptions*	103030272	103030283
产品性能特性/Product Performance Characteristics		
材质/ Material	铝合金	铝合金
开启行程/Opening distance：	30mm	30mm
开启压力/Actuation pressure	电动控制	电动控制
开启后排气面积/Exhaust area（Max）：	14900mm²	14900mm²
开启速度（mm/s）/Speed boost	4mm/s	4mm/s
抗中性盐雾性能/Neutral Salt Spray	外部/ Exterior 720H	外部/ Exterior 720H
	内部/ Interior 72H	内部/ Interior 72H
风扇尺寸(mm)	120*120*38	-
适用温度/Applicable Temperature	-20℃～60℃	-20℃～60℃
通电时长(s)	可长期通电	可长期通电
电压(V)	24	24
功率(W)	31.8	3
IP等级/IP Level	IP66	IP66
可追溯性/Traceability	☑	☑

设计和尺寸/Designs&Dimensions

单位为毫米/Unit for Millimeter

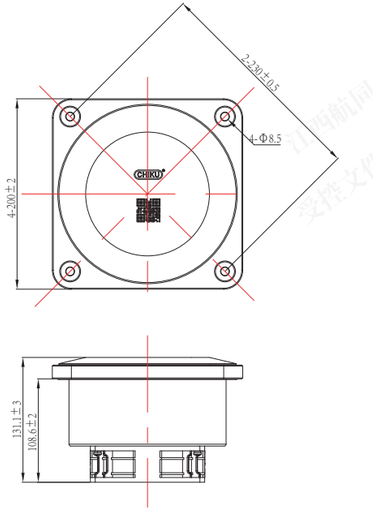

RAM-230x8-FSFB(E)-MW-O-66

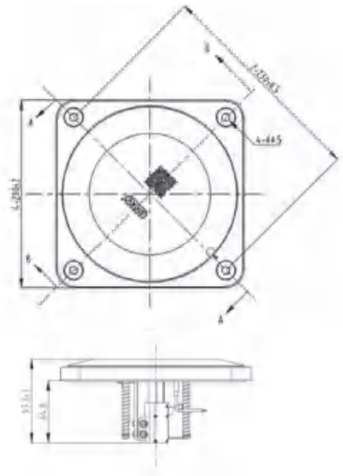

RAM-230x8-FSFB(E1)-MW-O-66

* 具体以实际的工程图为准/The actual engineering drawing shall prevail.

RAM-280... 消防安全阀/Safety valve for fire protection





* 带风扇 / With fan

产品名称/Item No.	RAM-280x8-FSFB(E)-MW-O-66	RAM-280x8-FSFB(E1)-MW-O-66
物料编码/Descriptions*	103030275	103030284
产品性能特性/Product Performance Characteristics		
材质/ Material	铝合金	铝合金
开启行程/Opening distance：	电动控制	电动控制
开启压力/Actuation pressure	-	-
开启后排气面积/Exhaust area（Max）：	28100mm²	28100mm²
开启速度/Speed boost	4mm/s	4mm/s
抗中性盐雾性能/Neutral Salt Spray	外部/ Exterior 720H	外部/ Exterior 720H
	内部/ Interior 72H	内部/ Interior 72H
风扇尺寸(mm)	200*200*53	-
适用温度/Applicable Temperature	-20℃～60℃	-20℃～60℃
通电时长(s)	可长期通电	可长期通电
电压(V)	24	24
功率(W)	147	3
IP等级/IP Level	IP66	IP66
可追溯性/Traceability	☑	☑

设计和尺寸/Designs&Dimensions

单位为毫米/Unit for Millimeter

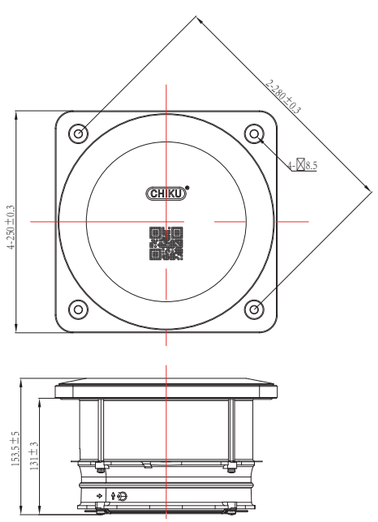

RAM-280x8-FSFB(E)-MW-O-66

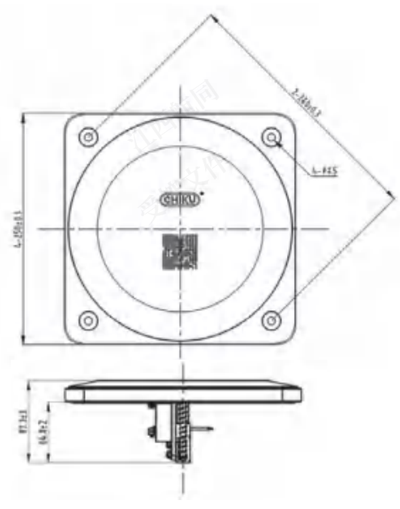

RAM-280x8-FSFB(E1)-MW-O-66

* 具体以实际的工程图为准/The actual engineering drawing shall prevail.

RAM-150... 消防安全阀/Safety valve for fire protection





* 带风扇 / With fan

产品名称/Item No.	RAM-150x7-FSFB(E10)-MW-O-66	RAM-150x7-FSFB(E11)-MW-O-66
物料编码/Descriptions*	103030299	103030300
产品性能特性/Product Performance Characteristics		
材质/ Material	铝合金	铝合金
开启行程/Opening distance：	30mm	30mm
开启压力/Actuation pressure	电动控制	电动控制
开启后排气面积/Exhaust area（Max）：	5600mm²	5600mm²
开启速度（mm/s）/Speed boost	4mm/s	4mm/s
抗中性盐雾性能/Neutral Salt Spray	外部/ Exterior 720H	外部/ Exterior 720H
	内部/ Interior 72H	内部/ Interior 72H
风扇尺寸(mm)	80*80*38	-
适用温度/Applicable Temperature	-20℃～60℃	-20℃～60℃
通电时长（s）	可长期通电	可长期通电
电压（V）	24	24
功率（W）	39.48	3
IP等级/IP Level	IP66	IP66
可追溯性/Traceability	☑	☑

设计和尺寸/Designs&Dimensions

单位为毫米/Unit for Millimeter

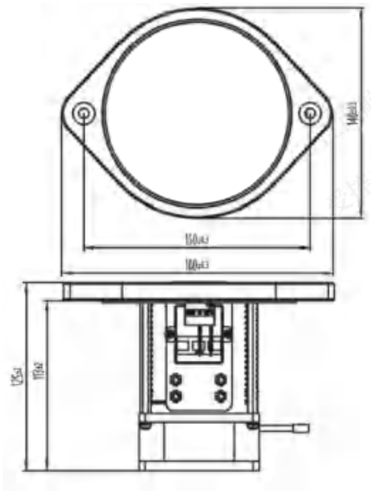

RAM-150x7-FSFB(E10)-MW-O-66

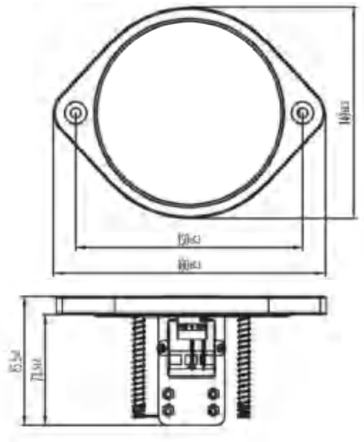

RAM-150x7-FSFB(E11)-MW-O-66

* 具体以实际的工程图为准/The actual engineering drawing shall prevail.

IP 防护等级说明/Protection Level Descriptions

防护等级说明符合EN60529电气标准

Degrees of protection provided by enclosures (IP-Code) according to IEC 60529

接触保护和外来物保护等级，第一参数

Protection against solid foreign objects, marked first index

第一参数	防护等级 简述	详细描述
0	无防护	
1	防护50mm 直径和更大的固体外来体	防护球体物质，直径大于50mm，不应完全进入
2	防护12.5mm直径和更大的固体外来体	防护球体物质，直径大于12.5mm，不应完全进入
3	防护2.5mm直径和更大的固体外来体	防护球体物质，直径大于2.5mm，不应完全进入
4	防护1.0mm直径和更大的固体外来体	防护球体物质，直径大于1.0mm，不应完全进入
5	防护灰尘	不可能完全阻止灰尘进入，但灰尘进入的数量不会对设备造成危害
6	灰尘封闭	完全防止灰尘进入
	注：球体的直径不应穿过柜体的孔	

First Index	Protection grade Short description	Definition
0	None–Protected	
1	Protection against solid foreign objects of 50mm diameter and greater	The object probe,sphere of 50 mm diameter,shall not fully penetrate*
2	Protection against solid foreign objects of 12.5mm diameter and greater	The object probe,sphere of 12.5 mm diameter,shall not fully penetrate*
3	Protection against solid foreign objects of 2.5mm diameter and greater	The object probe,sphere of 2.5 mm diameter,shall not fully penetrate at all*
4	Protection against solid foreign objects of 1.0mm diameter and greater	The object probe,sphere of 1.0 mm diameter,shall not fully penetrate at all*
5	Dust–Protected	Ingress of dust is not totally prevented. But dust shall not penetrate in a quantity to interfere with satisafactory operation of apparatus or to impair safety
6	Dust–tight	No ingress of dust
	Note:The full diameter of the object probe shall not pass through an opening of the enclosure	

防水保护等级，第二参数

Protection against water, marked second index

第二参数	防护等级 简述	详细描述
0	无防护	
1	水滴防护	垂直落下的水滴不应引起损害
2	倾斜15度时，防护水滴	向任何一侧倾斜15度角时，垂直落下的水滴不应引起损害
3	防护溅出的水	以60度角从垂直线两侧溅出的水,不应引起损害
4	防护喷水	从每个方向对准柜体的喷水都不应引起损害
5	防护射水	从每个方向对准柜体的射水都不应引起损害
6	防护强射水	从每个方向对准柜体的强射水都不应引起损害
7	防护短时浸水	在标准压力下短时浸入水中时，不应有能引起损害的水量浸入
8	防护长期浸水	可以在特定的条件下浸入水中，不应有能引起损害的水量浸入

Second Index	Protection grade Short description	Definition
0	None–Protected	
1	Protection against failing water drops	Vertically failling drops shall have no harmful effects
2	Protection against failing water drops when enclosure tilted up to 15°	Vertically failling drops shall have no harmful effects when the enclosure is tilted at any angle up to 15° on either side of the vertical
3	Protection against spraying water	Water sprayed at an angle up to 60° on either side of the vertical shall have no harmful effects
4	Protection against splashing water	Water splashed against the enclosure from any direction shall have to harmful effects
5	Protection against water jet	Water projected in jets against the enclosure from any direction shall have to harmful effects
6	Protection against powered water jets	Water projected in powerful jets against the enclosure from any direction shall have to harmful effects
7	Protected against the effects of temporary immersion in water	Ingress of water in quantities effects shall not be possible when enclosure is temporarily immersed in water under standardised conditions of pressure and time
8	Protected against the effects of continuous immersion in water	Ingress of water in quantities causing harmful effects shall not be possible when enclosure is continuously immersed in water under conditions which shall be agreed between manufacturer and user but which are more severe than for numeral?

例：IP 6 8

Example：IP 6 8

螺纹标准及开孔数据 /Thread standard

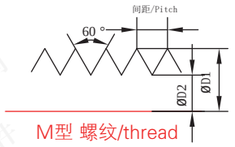

M型 螺纹/thread

公制ISO螺纹EN60423 Metric ISO thread to EN60423

公制螺纹 Metric thread	螺距 Pitch	螺纹外径D1 Nominal Size	螺纹内径D2 Core diameter	开孔尺寸D3 Bore through
M12X1.5	1.5	12	10.5	12.2–12.4
M14X1.5	1.5	14	12.5	14.2–14.4
M16X1.5	1.5	16	14.5	16.2–16.4
M18X1.5	1.5	18	16.5	18.2–18.4
M20X1.5	1.5	20	18.5	20.2–20.4
M22X1.5	1.5	22	20.5	22.2–22.4
M25X1.5	1.5	25	23.5	25.2–25.4
M32X1.5	1.5	32	30.5	32.2–32.4
M36X1.5	1.5	36	34.5	36.3–36.5
M40X1.5	1.5	40	38.5	40.3–40.5
M50X1.5	1.5	50	48.5	50.3–50.5
M63X1.5	1.5	63	61.5	63.3–63.5
M72X2.0	2.0	72	70.0	72.3–72.5
M80X2.0	2.0	80	78.0	80.3–80.5

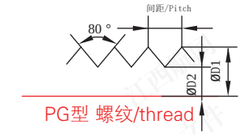

PG型 螺纹/thread

德制PG螺纹 DIN 40430 PG thread to DIN 40430

公制螺纹 Metric thread	螺距 Pitch	螺纹外径D1 Nominal Size	螺纹内径D2 Core diameter	开孔尺寸D3 Bore through
PG7	1.270	12.5	11.28	12.7–12.9
PG9	1.410	15.2	13.86	15.4–15.6
PG11	1.410	18.6	17.26	18.8–19.0
PG13.5	1.410	20.4	19.06	20.6–20.8
PG16	1.410	22.5	21.16	22.7–22.9
PG21	1.588	28.3	26.78	28.5–28.7
PG29	1.588	37.0	35.48	37.3–37.5
PG36	1.588	47.0	45.48	47.3–47.5
PG42	1.588	54.0	52.48	54.3–54.5
PG48	1.588	59.3	57.78	59.6–59.8

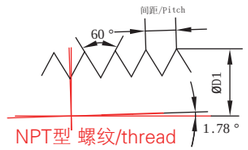

NPT型 螺纹/thread

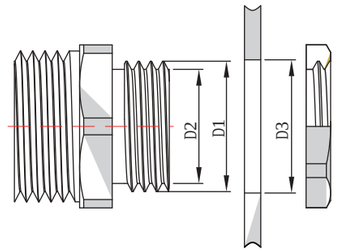

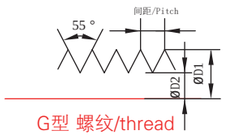

G型 螺纹/thread

美制NPT锥螺纹 NPT(conical) American pipa thread

公制螺纹 Metric thread	螺距 Pitch	螺纹外径D1 Nominal Size	螺纹数量 Number of theads	开孔尺寸D3 Bore through
NPT 1/4	1.411	13.716	18	13.9–14.1
NPT 3/8	1.411	17.415	18	13.9–14.1
NPT 1/2	1.814	21.336	14	21.5–21.7
NPT 3/4	1.814	26.67	14	26.8–27.0
NPT 1	2.208	33.4	11 1/2	33.6–33.8
NPT 1 1/4	2.208	42.164	11 1/2	42.4–42.7
NPT 1 1/2	2.208	48.26	11 1/2	48.6–48.8
NPT 2	2.208	60.352	11 1/2	60.8–61.0
NPT 2 1/2	3.175	73.025	8	73.3–73.5
NPT 3	3.175	88.9	8	90.2–90.4
NPT 3 1/2	3.175	101.6	8	101.9–102.1

英制G管螺纹 DIN ISO 228 G thread to DIN ISO 228

公制螺纹 Metric thread	螺距 Pitch	螺纹外径D1 Nominal Size	螺纹内径D2 Core diameter	开孔尺寸D3 Bore through
G1/4	1.337	13.157	11.145	13.4–13.6
G3/8	1.337	16.662	14.950	16.9–17.1
G1/2	1.814	20.955	18.631	21.2–21.4
G3/4	1.814	26.411	24.117	26.6–26.8
G1	2.309	33.249	30.291	33.5–34.7
G1 1/4	2.309	41.910	38.952	42.3–42.5
G1 1/2	2.309	47.803	44.845	48.1–48.3
G2	2.309	59.614	56.656	59.9–60.1
G2 1/2	2.309	75.184	72.226	75.5–75.7
G3	2.309	87.884	84.926	88.2–88.4
G3 1/2	2.309	100.330	97.372	100.6–100.8
G4	2.309	113.03	110.072	113.3–113.5

螺纹扭矩 VDE 0619 Thread torque VDE 0619

螺纹规格 Thread specification	夹紧螺帽 The clamping nut 塑料 Plastic	夹紧螺帽 The clamping nut 金属 Metal	螺母 Nut 塑料 Plastic	螺母 Nut 金属 Metal
M12/PG7	1.3	3.5	1.2	4.17
M16/PG9	2.5	6.25	1.5	4.17
M18/PG11	3.75	6.25	2.0	4.17
M20/PG13.5	3.75	6.25	2.0	4.17
M22/M24/PG16	5.0	7.5	3.33	5.0
M25	7.5	10	3.33	6.67
M27/PG21	7.5	10	5.0	6.67
M32/M36/PG29	7.5	10	5.0	6.67
M40/PG36	7.5	10	5.0	6.67
M50/PG42	7.5	10	5.0	6.67
M63/PG48	10	12.5	5.0	6.67

